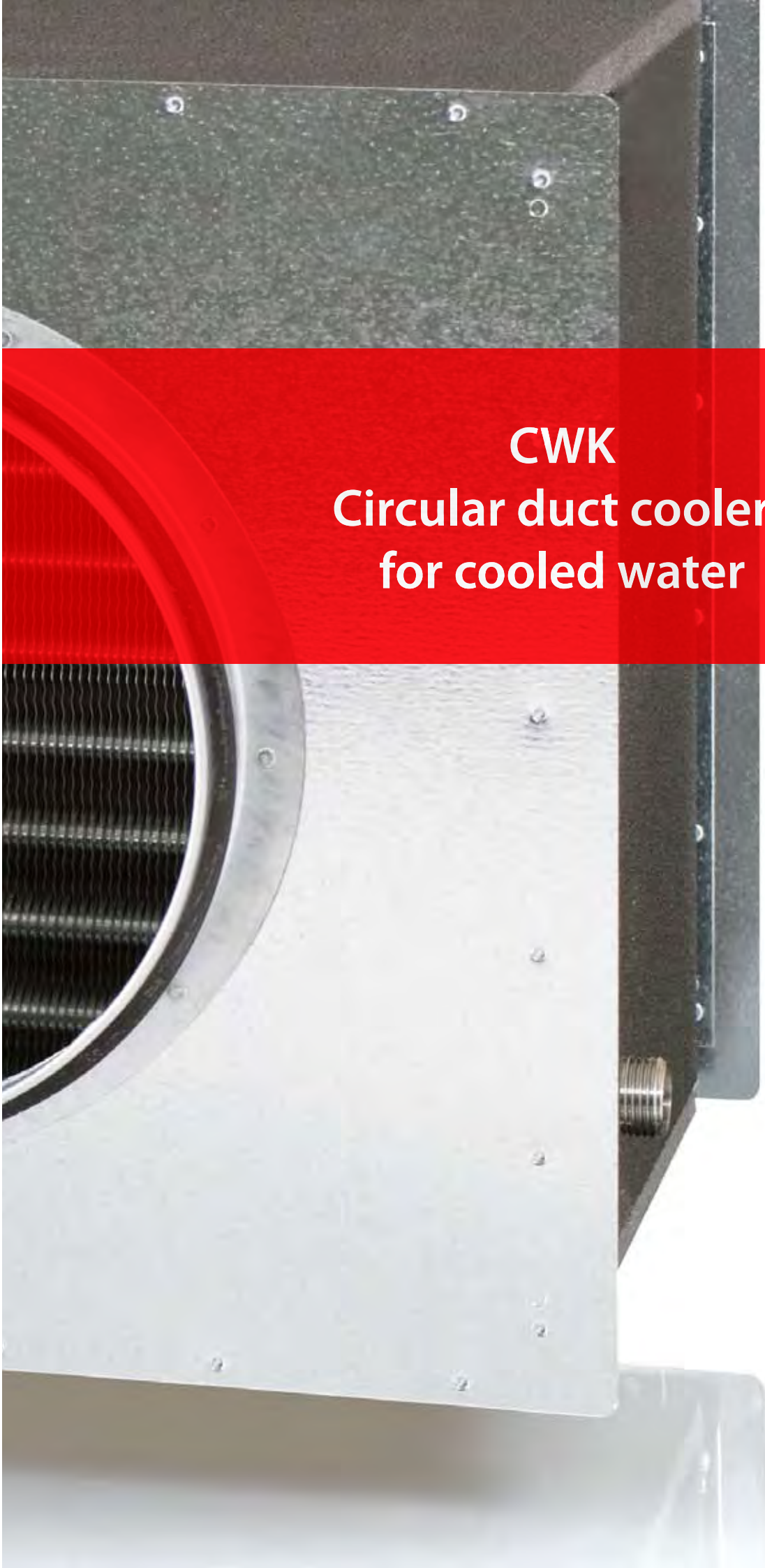

CWK
Circular duct coolers for cooled water

Mech-Elec®

Mech-Elec
www.mech-elec.ie
info@mech-elec.ie

CWK

Circular duct coolers for cooled water

CWK duct coolers are designed for using cooled water as the cooling medium and are used for cooling the ventilation air in ventilation systems. The CWK is also used for individual cooling of the air supplied to individual rooms (zones). The duct cooler can be supplemented with regulators, sensors, actuators, valves and anti-freeze control for controlling the room air or supply air temperature.

- 7 standard sizes
- Circular duct connection with rubber seals
- Casing of Aluzinc-coated sheet steel
- Openable cover for inspection and cleaning
- Stainless steel drip tray for collecting the condensate
- Tightness class C to EN 1751

Control

VEAB has a complete range of regulators, actuators and valves. The regulators can carry out cooling control by room air or supply air temperature control.

Operating data

Max. operating temp.:	+150°C
Max. operating press.:	1,0 MPa (10 Bar)

The coils are tested for leakage.

Design

The casing is made of Aluzinc-coated sheet steel.
The coil has aluminium fins and tubes and pipe connections of copper.
Stainless steel drip tray for collecting the condensate, with drain connection (R1/2).
Openable cover to simplify inspection and cleaning.
Duct connections have rubber seals.

Installation

The CWK is designed for installation in a horizontal duct.

Project design/ordering

Type designation (example) CWK 100 - 3 - 2,5

- 100 – Size designation
- 3 – Number of tube rows
- 2,5 – Fin pitch, mm

Specify the following when placing your order

1. Air flow rate:	- m^3/h
2. Inlet air temperature:	- °C
3. Outlet air temp. or required output:	- °C or - kW
4. Duct size:	- mm
5. Inlet water temp.:	- °C
6. Outlet water temp. or water flow:	- °C or - l/sek
7. Inlet air humidity:	- % RH
8. Anti-freeze agent:	- type / %

Mech-Elec
www.mech-elec.ie
info@mech-elec.ie

Types and dimensions

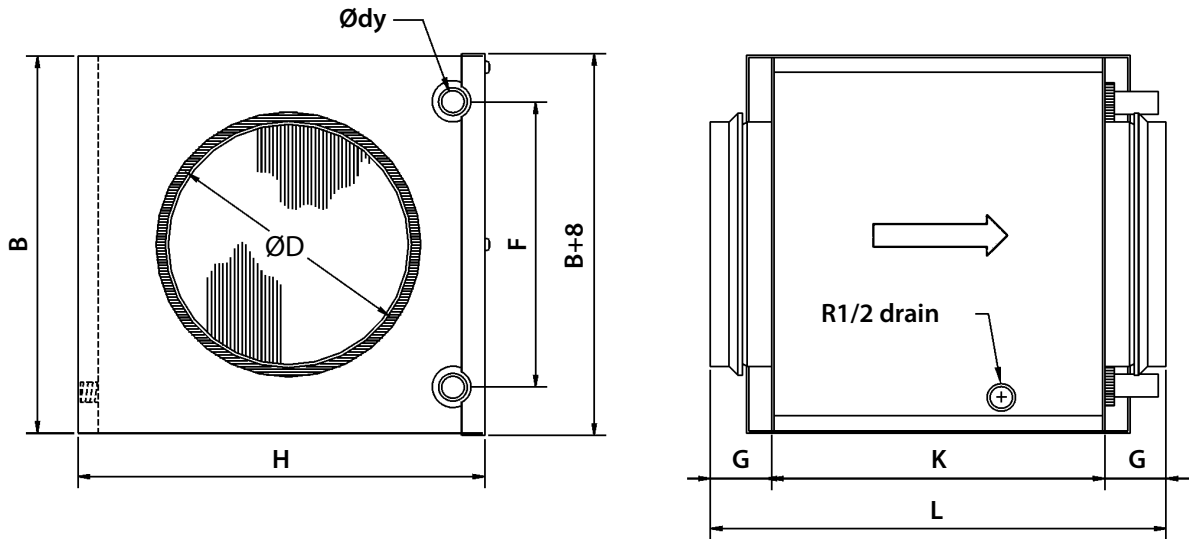

Dimensions in mm

Type	Dimensions (mm)								Weight
	ØD	B	H	Ødy	F	G	K	L	Kg
CWK 100-3-2,5	100	180	251	10	100	40	276	356	4,4
CWK 125-3-2,5	125	255	326	10	175	40	276	356	6,8
CWK 160-3-2,5	160	255	326	10	175	40	276	356	6,7
CWK 200-3-2,5	200	330	411	22	250	40	276	356	9,7
CWK 250-3-2,5	250	405	486	22	325	40	276	356	13
CWK 315-3-2,5	315	504	560	22	400	40	276	356	16
CWK 400-3-2,5	400	529	710	22	425	65	330	460	21,4

The tables on the following pages give examples of capacities for each size. We can also carry out computer calculations – get in touch with VEAB.

Mech-Elec
www.mech-elec.ie
info@mech-elec.ie

Capacity of CWK 100-3-2.5
Water temperature 6/12°C

Air flow	Press. drop	Inlet air temp.	Inlet air humidity	Outlet air temp.	Output	Water flow	Water press. drop
m^3/h	Pa	°C	% RH	°C	kW	l/s	kPa
54	7	25	50	14,3	0,2	0,01	< 0,5
54	7	30	45	15,8	0,4	0,01	1
100	22	25	50	16,4	0,3	0,01	1
100	22	30	45	18,5	0,5	0,02	2
145	58	25	50	17,5	0,4	0,02	1
145	58	30	45	20,0	0,6	0,02	3

Capacity of CWK 125-3-2.5
Water temperature 6/12°C

Air flow	Press. drop	Inlet air temp.	Inlet air humidity	Outlet air temp.	Output	Water flow	Water press. drop
m^3/h	Pa	°C	% RH	°C	kW	l/s	kPa
85	3	25	50	12,6	0,5	0,02	3
85	3	30	45	13,5	0,7	0,03	5
150	9	25	50	14,5	0,7	0,03	5
150	9	30	45	15,7	1,1	0,04	10
215	18	25	50	15,6	0,8	0,03	7
215	18	30	45	17,0	1,4	0,05	16

Capacity of CWK 160-3-2.5
Water temperature 6/12°C

Air flow	Press. drop	Inlet air temp.	Inlet air humidity	Outlet air temp.	Output	Water flow	Water press. drop
m^3/h	Pa	°C	% RH	°C	kW	l/s	kPa
145	9	25	50	14,4	0,7	0,03	4
145	9	30	45	15,6	1,0	0,04	10
250	24	25	50	16,1	0,9	0,04	8
250	24	30	45	17,4	1,5	0,06	20
355	45	25	50	17,0	1,1	0,04	11
355	45	30	45	18,4	1,3	0,08	32

Capacity of CWK 200-3-2.5
Water temperature 6/12°C

Air flow	Press. drop	Inlet air temp.	Inlet air humidity	Outlet air temp.	Output	Water flow	Water press. drop
m^3/h	Pa	°C	% RH	°C	kW	l/s	kPa
225	6	25	50	14,1	1,0	0,05	2
225	6	30	45	15,3	1,6	0,06	5
390	17	25	50	15,9	1,4	0,06	4
390	17	30	45	17,3	2,3	0,09	9
555	33	25	50	16,9	1,7	0,07	5
555	33	30	45	18,4	3,1	0,12	15

Mech-Elec
www.mech-elec.ie
info@mech-elec.ie

Capacity of CWK 250-3-2.5
Water temperature 6/12°C

Air flow	Press. drop	Inlet air temp.	Inlet air humidity	Outlet air temp.	Output	Water flow	Water press. drop
m^3/h	Pa	°C	% RH	°C	kW	l/s	kPa
360	6	25	50	14,2	1,6	0,06	2
360	6	30	45	15,4	2,5	0,10	5
630	18	25	50	16,0	2,2	0,09	4
630	18	30	45	17,3	3,8	0,15	10
900	34	25	50	17,0	2,7	0,11	6
900	34	30	45	18,2	5,1	0,20	17

Capacity of CWK 315-3-2.5
Water temperature 6/12°C

Air flow	Press. drop	Inlet air temp.	Inlet air humidity	Outlet air temp.	Output	Water flow	Water press. drop
m^3/h	Pa	°C	% RH	°C	kW	l/s	kPa
560	7	25	50	14,5	2,4	0,10	3
560	7	30	45	15,4	3,9	0,16	7
985	20	25	50	16,1	3,4	0,13	5
985	20	30	45	17,2	6,1	0,24	14
1410	39	25	50	17,0	4,3	0,17	8
1410	39	30	45	18,1	8,3	0,33	25

Capacity of CWK 400-3-2.5
Water temperature 6/12°C

Air flow	Press. drop	Inlet air temp.	Inlet air humidity	Outlet air temp.	Output	Water flow	Water press. drop
m^3/h	Pa	°C	% RH	°C	kW	l/s	kPa
900	9	25	50	15,2	3,4	0,14	2
900	9	30	45	16,3	5,8	0,23	5
1590	25	25	50	16,8	4,8	0,19	4
1590	25	30	45	17,8	9,3	0,37	12
2280	49	25	50	17,6	6,1	0,24	6
2280	49	30	45	18,6	12,8	0,51	22

Mech-Elec
www.mech-elec.ie
info@mech-elec.ie

Regulators

The AQUA and OPTIGO regulators are designed for controlling the room temperature or the supply air temperature in air handling systems. The regulators can be combined with sensors, actuators, valves, etc.

AQUA 24/230T

AQUA 24 TF

OPTIGO OP5/10

AQUA

- Complete regulator with built-in room sensor
- Floating control for controlling three-position actuators
- Cascade connection with minimum limit for room temperature control
- Can be equipped with external room and/or duct sensor
- Temperature range 0 - 30°C, depending on the sensor employed
- Can be equipped with external setpoint adjustment

AQUA 24 T

- 24 V supply

AQUA 230 T

- 230 V AC supply

AQUA 24 TF

- 24 V supply
- Regulating anti-freeze protection and heating during stoppage

OPTIGO

- Regulator with display
- One knob for all settings
- For mounting on DIN rail
- Operates with PT1000 sensor in the range of -20°C to + 40°C
- Started/stopped with "run" signal from the fan

OP 5

- 24 V supply
- 0...10 V control signal output
- Operates with one sensor (room or duct sensor)
- Can be reset for heating or cooling control

OP 10

- 24 V supply
- Can be reset for 0...10 V control signal output or 3-point control
- Two control outputs, e.g. for heating and cooling in sequence
- Input for two sensors and anti-freeze sensor
- Supply air temperature control or room temperature control with cascade-controlled supply air
- Anti-freeze control with heating during stoppage
- Output, e.g. for starting/stopping of fans via 230 V AC, 5A relay
- Programmable one-week timer for controlling both fan and heating/cooling
- Terminal for external timer that extends the operating time

OP 10-230

- Same functions as the OP 10, but with 230V AC supply

Mech-Elec
www.mech-elec.ie
info@mech-elec.ie

Accessories for AQUA

	Product	Range	Design
	Duct sensor TG-K330	0-30°C	Degree of protection IP 20
	Room sensor TG-R430 with setpoint adjust-ment	0-30°C	Degree of protection IP 30
	Room sensor TG-R530	0-30°C	Degree of protection IP 30
	Room sensor TG-R630	0-30°C	Degree of protection IP 65
	Trafo 60 Totally enclosed transfor-mer for wall mounting. Built-in two-pole fuse on secondary side		Primary voltage 230 V AC Secondary voltage 24 V AC Max. rating 60 VA Degree of protection IP 44

Accessories for OPTIGO

	Product	Range	Design
	TG-K3/PT1000	-30...+70°C	Degree of protection IP 65
	Room sensor TG-R4/PT1000 with setpoint adjust-ment	+5...30°C	Degree of protection IP 30
	Room sensor TG-R5/PT1000	+5...30°C	Degree of protection IP 30
	Room sensor TG-UH/PT1000	-30...+120°C	Degree of protection IP 65
	Trafo 60 Totally enclosed transfor-mer for wall mounting. Built-in two-pole fuse on secondary side		Primary voltage 230 V AC Secondary voltage 24 V AC Max. rating 60 VA Degree of protection IP 44

CWK

Mech-Elec
www.mech-elec.ie
info@mech-elec.ie

Actuators and valves for Kvs 0.25 - 6.0 (95°C max.)

Description	Type
3-position actuator for VSXT/VMXT valves	MVT 44
Actuator for 0...10V signal for VSXT/VMXT valves	MVT 57

Description	Kvs	TypE
2-way 1/2" valve	0,25	VSXT 09P
2-way 1/2" valve	0,4	VSXT 10P
2-way 1/2" valve	0,6	VSXT 11P
2-way 1/2" valve	1,0	VSXT 12P
2-way 1/2" valve	1,6	VSXT 13P
2-way 3/4" valve	2,5	VSXT 21P
2-way 3/4" valve	4,0	VSXT 24P
2-way 3/4" valve	6,0	VSXT 26P
3-way 1/2" valve	0,25	VMXT 09P
3-way 1/2" valve	0,4	VMXT 10P
3-way 1/2" valve	0,6	VMXT 11P
3-way 1/2" valve	1,0	VMXT 12P
3-way 1/2" valve	1,6	VMXT 13P
3-way 3/4" valve	2,5	VMXT 21P
3-way 3/4" valve	4,0	VMXT 24P
3-way 3/4" valve	6,0	VMXT 26P

Actuator MVT

Valve VSXT

Valve VMXT

CWK

Mech-Elec
www.mech-elec.ie
info@mech-elec.ie

Guide for selection of valves and actuators for CWK coolers

CWW type	Valve type	Kvs	Actuators	
			3-position MVT 44	0...10 V MVT 57
CWK 100-3-2,5	2-way VSXT 10P	0,4	●	●
CWK 125-3-3,5	2-way VSXT 10P	0,4	●	●
CWK 160-3-2,5	2-way VSXT 10P	0,4	●	●
CWK 200-3-2,5	2-way VSXT 11P	0,6	●	●
CWK 250-3-2,5	2-way VSXT 12P	1,0	●	●
CWK 315-3-2,5	2-way VSXT 13P	1,6	●	●
CWK 400-2-2,5	2-way VSXT 21P	2,5	●	●

Pressure drop across valves

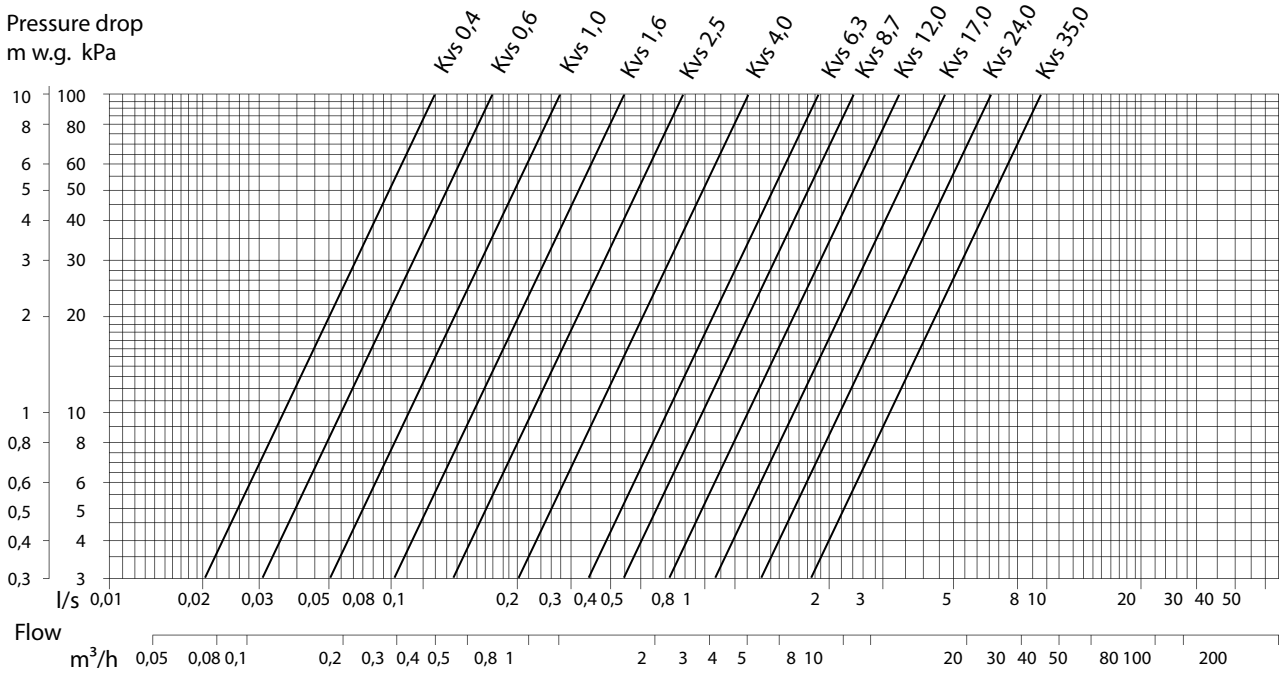

CWK