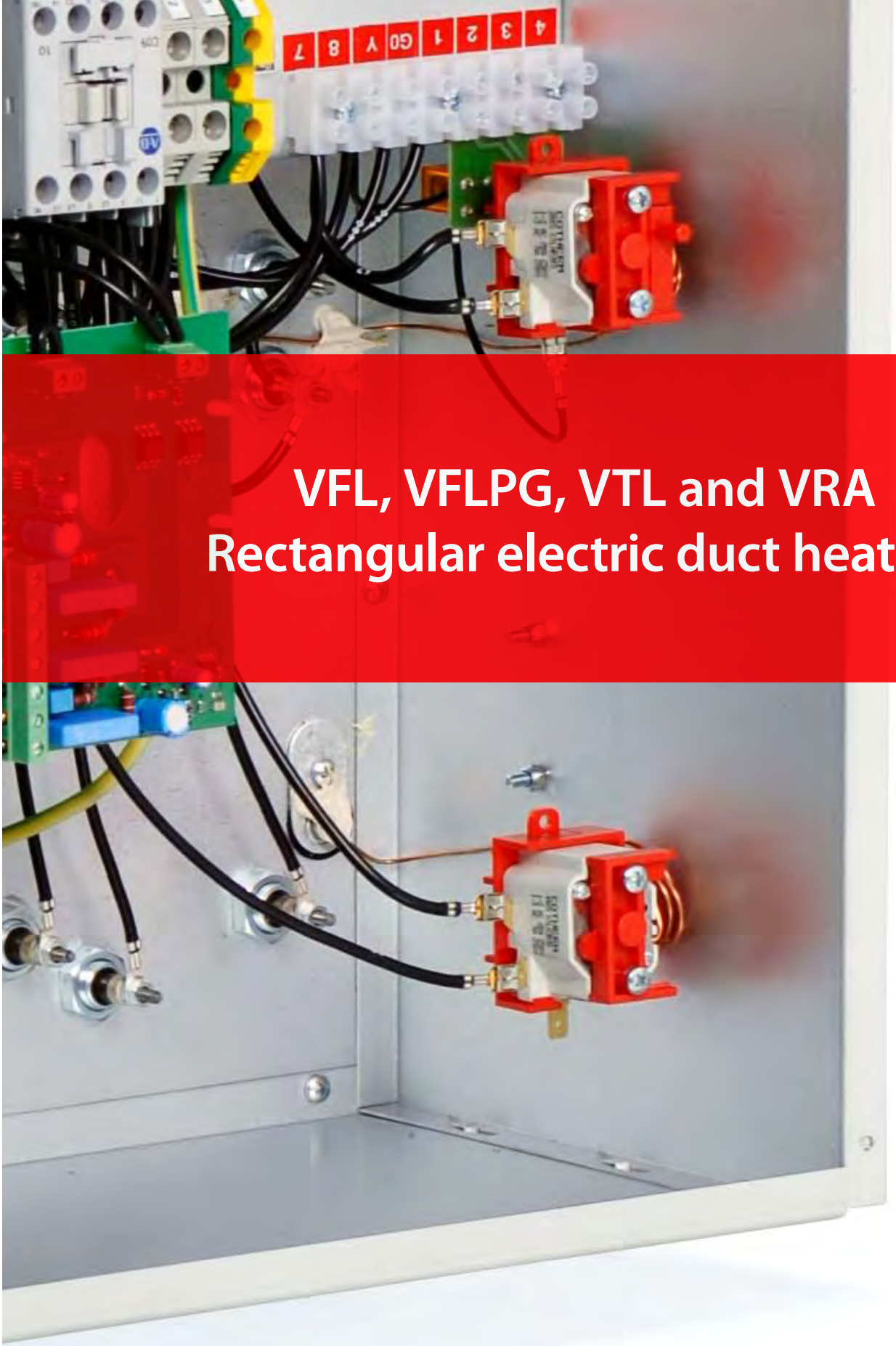

VFL, VFLPG, VTL and VRA
Rectangular electric duct heaters

Mech-Elec®

Mech-Elec
www.mech-elec.ie
info@mech-elec.ie

VFL, VFLPG, VTL and VRA

Rectangular electric duct heaters

VEAB rectangular duct heaters are available in ratings of up to 2000 kW and are used for heating the supply air in duct systems, in central ventilation units and for various industrial processes. If correctly rated, rectangular duct heaters can provide heating for entire houses and buildings.
Our flexible production system enables us to adapt the duct heaters accurately to the application. This may concern heaters for air handling units, industrial processes or very arduous environments. This may involve the need for strengthened electrical insulation, the use of stainless steels, high power ratings, high operating temperatures or the like.

- Power ratings from 0.5 kW to 2000 kW
- Degree of protection IP43 as standard. IP55 to special order.
- With built-in regulator or for external control.
- Can be installed both horizontally and vertically.
- Built-in overheating protections, at least one with automatic reset and one with manual reset.
- Enclosed stainless steel plain tube elements.

Standard design

The casing is made of Aluzinc coated sheet steel, AZ 185, and the heater elements are made of EN 1.4541 stainless steel.
The rectangular duct heaters conform to the provisions for corrosiveness class C4 (M3). The junction box includes the terminal blocks necessary for the electrical connections.
The casing is available in four versions. See page 6 for more detailed information. The duct heaters are produced to degree of protection IP43, but are also available to IP55 to special order.

Overheating protection

All duct heater models have at least two overheating protections – one with automatic reset and one with manual reset. All duct heaters have the overheating protection reset button on the heater cover.

Alarm contacts

The -MTEML and -MTXL models have potential-free alarm contacts that indicate tripping of the overheating protection with manual reset.

Approvals

The duct heaters have been tested and approved by SEMKO in accordance with:
LVD Directive: EN 60355-1, EN 60335-2-30, and SEMKO 111 FA11982.
EMC Directive: EN 61000-6-2 and EN 61000-6-3.
Heaters with ratings above 200 kW are provided with CE marking.

Mech-Elec
www.mech-elec.ie
info@mech-elec.ie

Control

Built-in regulator

A built-in regulator ensures simple installation, e.g. due to fewer cable runs, which lowers the installation cost and reduces the risk of incorrect wiring. The regulator is electronic and controls the output across a triac by means of time proportional control (intermittent ON/OFF control). This provides very accurate temperature control. Since control is electronic, it is entirely silent and sustains a minimum of wear. On heaters with higher ratings, parts of the output are controlled by a stepping switch. However, fine adjustment of the temperature is always carried out by the electronic ON/OFF control.
The following models are available with built-in regulator:

-MTEML, for one or two sensors

Duct heater with built-in temperature regulator, for room or duct sensor. Can also be connected to a main sensor in the room and a min./max. sensor in the supply air. See page 8.

-MTXL, for 0...10V control signal

Duct heater with built-in regulator, for external 0...10V control signal. See page 10.

External regulator

Some duct heaters can be specified without built-in regulator, and an external regulator must then be added.
The following model is available for external regulator:

-M

The duct heater is equipped with an external temperature regulator or thermostat. See page 12.

Options other than the standard version

In addition to the standard design, several options are available for matching to your specific application.

Other materials

The casing can be made of EN 1.4301 stainless steel, or EN 1.4404 acid-proof stainless steel.

Duct heater for outlet temperatures of 40°C - 121°C

The overheating protection is matched to the operating temperature.
The junction box is provided with 25 mm thick insulation on the duct side.

Duct heater for outlet temperatures of 121°C - 400°C

Casing of hot-rolled sheet steel or stainless steel. The overheating protection is matched to the operating temperature. The junction box is provided with 100 mm thick insulation on the duct side. An air gap is provided between the duct and the junction box. Degree of protection IP30.

Strengthened electrical insulation

In order to avoid leakage currents to earth, the elements are mounted on electrically insulating material. Suitable in, for instance, marine applications, when it is difficult to provide electrical connection to earth.

Degree of protection IP55

To special order, duct heaters can be produced to degree of protection IP55 instead of the standard IP43 version.

Heater in the junction box

A heater is advisable for use during stoppages, e.g. in humid environments, in order to avoid admission of moisture at the element ends, or to reduce the risk of condensation in the junction box when cold air is flowing in the duct.

Circular connections

If the output needed or the connection diameter exceeds what is available in the standard range of our CV circular duct heaters, rectangular duct heaters can be produced with circular connections.

Non-standard supply voltages

In the event of non-standard voltages up to and including 690V, 3-phase, only model -M (for external control) is produced.

Built-in main switch

Available only for models -MTEML and -MTXL (with built-in control equipment).

Mech-Elec
www.mech-elec.ie
info@mech-elec.ie

Overview of range

Our rectangular duct heaters are available in four versions, designed to suit different methods of installation. The width and height are selected to suit the width and height of the duct or unit in which the heater is to be fitted. The minimum air velocity of 1.5 m/s must also be taken into account.

		Model		
		-MTEML	-MTXL	-M
Versions	VFL	X	X	X
	VFLPG	X	X	X
	VTL	X	X	X
	VRA	X	X	X

	Dimensions	
	Min.	Max.
Width, B	200 mm	2000 mm
Height, H	200 mm	2000 mm
Depth, D	270 mm	500 mm
	(standard for D = 370 mm)	

Air pressure drop across the duct heater

The pressure drop of the air flowing through the duct heater is dependent on the air velocity and the number of heater element rows in the heater. The approximate number of heater element rows can be calculated from the following formula:

$$X = \frac{P}{A \times 15}$$

X = number of element rows
A = flow area of duct heater, W x H, m^2
P = total power, kW

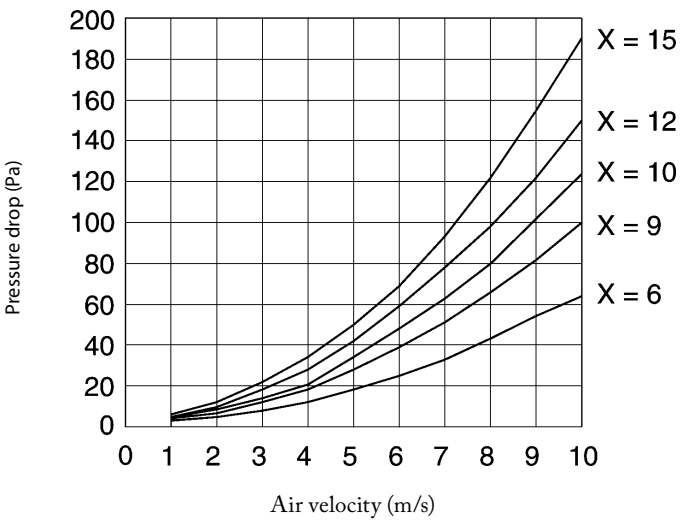

Mech-Elec
www.mech-elec.ie
info@mech-elec.ie

Installation

The duct heaters can be installed in horizontal of vertical ducts. The air flow through the duct heater must be in the direction of the arrow on the duct heater cover. In horizontal duct runs, the junction box can be located either on the right or on the left, although not on the top or the bottom. The duct heater must be mounted so that the air flow will be uniform throughout the cross-sectional area. We recommend that the distance to or from a duct bend, fan, damper, etc. should be at least the same as the diagonal dimension of the duct heater, i.e. from corner to corner at the connection face of the heater.

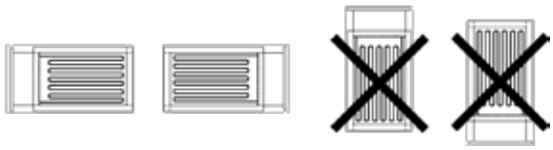

Interlock with fan/air flow rate

Electric duct heaters must always be installed so that they are interlocked either with the fan that delivers air into the duct or with the air flow rate through the heater.
The power supply to the duct heater must be interrupted when the fan is tripped or if the air flow should cease. For heaters rated above 30 kW, it is recommended that the fan should be left running for at least 3 minutes after the power supply has been switched off.

The circuit boards of -MTEML and -MTXL models rated up to 27 kW, 3-phase, 400 V are provided with a terminal for connecting pressure or flow monitors. Heaters rated above 27 kW are interlocked via the incoming control circuit. The –M model is always interlocked on the incoming power supply.

Heater element surface temperature

The surface temperatures of the heater elements are dependent on the air velocity and the specific surface power of the elements. The specific surface power of the elements is around 3 W/cm². The graph shows the surface temperature of the heater elements when the outlet air temperature of the duct heater is around 20°C.

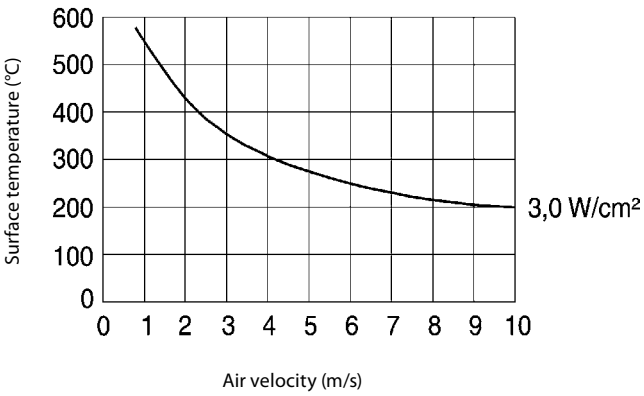

Minimum air velocity and outlet air temperature

The duct air heaters are designed as standard for a minimum air velocity of 1.5 m/s and a maximum operating air temperature of 40°C.
Ambient temperatures for duct heaters:
Without built-in control equipment = 40°C max.
With built-in control equipment = 30°C max.

The following formula can be used for calculating the air velocity:

$$V = \frac{Q}{3600 \times A}$$

V = air velocity, m/s
Q = air flow rate, m³/h
A = cross-sectional area of the air heater (B×H), m²

Power demand

The air flowing through the air heater is heated in accordance with the following formula:

$$P = Q \times 0{,}36 \times \Delta t$$

P = power, W
Q = air flow rate, m³/h
Δt = temperature rise, °C

Mech-Elec
www.mech-elec.ie
info@mech-elec.ie

Dimensions

VFL - with flanges

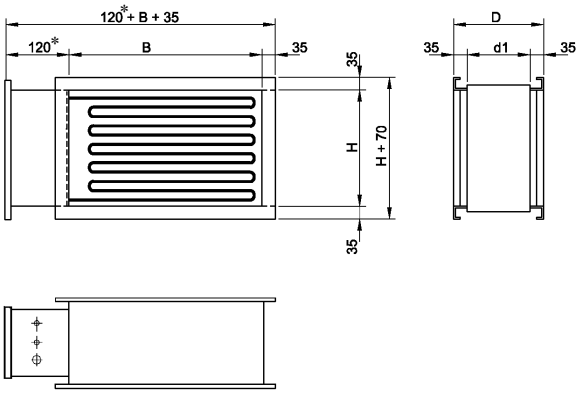

VFLPG - suitable for PG slip clamps

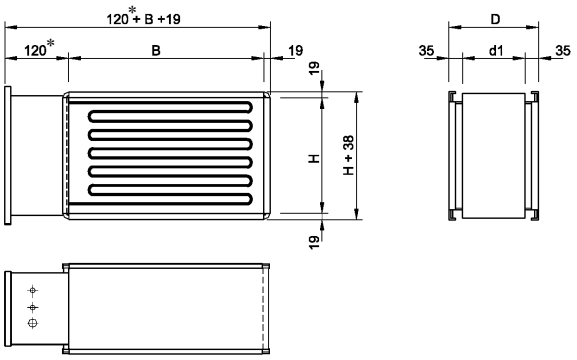

VTL - for insertion mounting in the duct

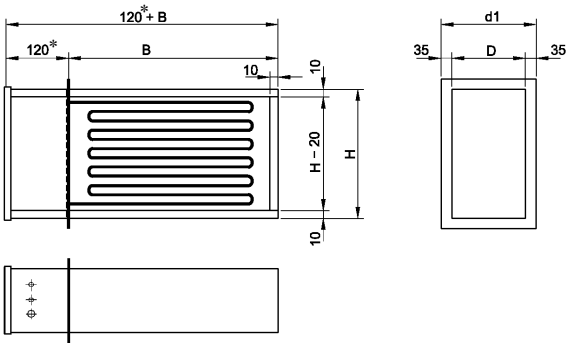

VRA – for unit

Design in accordance with customer specification

**) The dimension is 200 mm for duct heaters with built-in control equipment.*

Mech-Elec
www.mech-elec.ie
info@mech-elec.ie

Project design/ordering

Versions	VFL – with flanges VFLPG – suitable for PG slip clamps VTL – for insertion mounting in the duct VRA – for unit	
Width, dimension B Height, dimension H	200 mm min., 2000 mm max. 200 mm min., 2000 mm max.	
Total output, kW	Can be selected between 0.5 kW and 2000 kW	
Power supply voltage	1 x 230 V = 1 single phase, 230 V 2 x 400 V = 2 phase, 400 V 3 x 400 V = 3 phase, 400 V 3 x 230 V = 3 phase, 230 V	
Model	-MTEML	Connected to a duct or room sensor, or to the main sensor in the room and a min./max. sensor in the supply air.
	-MTXL	The output is controlled by an external 0 …10 V control signal.
	-M	For external control equipment.
Casing material	A = Aluzinc, AZ 185 S = Stainless steel, EN 1.4301 SA = Acid-proof stainless steel, EN 1.4404	
Degree of protection	IP43 IP55	
Insulation	NI = Normal insulation RI = Reinforced electric Insulation	
Outlet air temperature	40C = 40°C max. outlet temperature 120C = 120°C max. outlet temperature	

Type designation

A type designation of a duct heater may be, for example, VFLPG-1200-500-100-3×400V-M-SA-IP43-NI-40°C, which describes the design of the product. The type designation is made up in accordance with the following model:

Version	Dimension W, width	Dimension H, height	Total output, kW	Power supply voltage, V	Model	Casing material	Degree of protection	Electric insulation	Outlet air temperature.
VFLPG	1200	500	100 kW	3 ×400V	M	SA	IP43	NI	40C

25 + 25 + 25 + 25

Number of steps and kW
Applies only to the –M model

Mech-Elec
www.mech-elec.ie
info@mech-elec.ie

VFL, VFLPG, VTL and VRA

Rectangular electric duct heaters with built-in control equipment for one or two sensors

Duct heaters with built-in control equipment are ready for installation on delivery
This offers the following benefits:
• Minimum of cable runs – ready-wired control equipment
• Simple installation – reduced installation costs
• Minimized risk of incorrect wiring on installation
• Accurate control.

- MTEML

For connection to a duct or room sensor. Alternatively, can be connected to two sensors: one sensor in the room and one min./max. sensor in the supply air. Has potential-free alarm contacts that indicate tripping of the overheating protection with manual reset. The sensors must be ordered separately.

Selecting the output

The total output of the duct heater with built-in control equipment can be selected freely from the entire range between 0.5 kW and 215 kW.

Project design/ordering

Descriptive text for- MTEML

VEAB type VFLPG-1200-500-100 kW-3x400V-MTEML-A-IP43-NI-40C duct heater (see page 7), with casing of Aluzinc-coated sheet steel, AZ 185, and heater elements of EN 1.4541 stainless steel. Has potential-free alarm contacts that indicate tripping of the overheating protection with manual reset. Control by means of built-in temperature regulator for room or duct sensor. Sensor and external set point adjuster must be ordered separately.

Mech-Elec
www.mech-elec.ie
info@mech-elec.ie

Accessories

There are several sensors/set point combinations for the VFL/VFLPG/VTL/VRA - MTEML. For particulars of sensors, see page 15. For a complete wiring diagram, see the installation instructions at our homepage www.veab.com. (Select Products/Duct heaters-Electric.)

TG-R430 as set point adjuster and room sensor.

Alt 1

TG-R430 as set point adjuster and room sensor.

Alt 2

TG-R430 as set point adjuster and room sensor.

TG-K360 as min./max. supply air sensor.

Room sensors and separate set point adjustment

Alt 3

TG-R430 as set point adjuster and room sensor.

TG-R530 (IP30) or TG-R630 (IP54) as room sensor.

Alt 4

TG-R430 as set point adjuster and room sensor.

TG-R530 (IP30) or TG-R630 (IP54) as room sensor.

TG-K360 as min./max. supply air sensor

Main sensor in the exhaust air and separate set point adjuster

Alt 5

TG-K330 as exhaust air sensor.

TG-R430 as set point adjuster.

Alt 6

TG-K330 as exhaust air sensor.

TG-R430 as set point adjuster.

TG-K360 as min./max. supply air sensor.

Supply air sensor and separate set point adjuster

Alt 7

TG-K330 as supply air sensor.

TG-R430 as set point adjuster.

Mech-Elec
www.mech-elec.ie
info@mech-elec.ie

VFL, VFLPG, VTL and VRA

Rectangular electric duct heaters with built-in control equipment for 0…10V external control signal

Duct heaters with built-in control equipment are ready for installation on delivery
This offers the following benefits:
- Minimum of cable runs – ready-wired control equipment
- Simple installation – reduced installation costs
- Minimized risk of incorrect wiring on installation
- Accurate control.

- MTXL

For connection to an external 0...10 V control signal.
Has potential-free alarm contacts that indicate tripping of the overheating protection with manual reset.

Selecting the outputt

The total output of the duct heater with built-in control equipment can be selected freely from the entire range between 0.5 kW and 215 kW.

Project design/ordering

Descriptive text for MTXL

VEAB type VFLPG-1200-500-100kW-3x400V-MTXL-A-IP43-NI-40C (see page 7) duct heater with casing of Aluzinc-coated sheet steel, AZ 185, and heater elements of EN 1.4541 stainless steel. Has potential-free alarm contacts that indicate tripping of the overheating protection with manual reset. Control by means of built-in regulator for 0...10 V control signal.

Mech-Elec
www.mech-elec.ie
info@mech-elec.ie

Control with accessories

There are several ways of controlling a VFL/VFLPG/VTL/VRA –MTXL heater. Three examples are presented here.

Master systems

0...10V

Ventilation unit that has built-in control with 0...10V output for reheating coil

0...10V

0...10V regulator control

0...10V

Mech-Elec
www.mech-elec.ie
info@mech-elec.ie

VFL, VFLPG, VTL and VRA

Rectangular electric duct heaters for external control equipment

The duct heaters are supplemented with external control equipment. It is important for this equipment to be matched to the heater and the power to be controlled. The table to the right provides guidance for suitable control equipment.

- M

Should preferably be controlled by a type PULSER or TTC regulator.

Selecting the output

The total output of a duct heater for external control equipment can be selected freely from 0,5 kW upwards. The output can be divided into a free number of output groups, with at least 0.3 kW and a maximum of 43 kW per output group.

Connection of output groups

Standard

Main power supply 400 V, 3-phase
0.3-3.5 kW: 400 V, 2-phase
3.6-43.0 kW: 400 V, 3-phase

Main power supply 230 V, 3-phase
0.3-1.99 kW: 230 V AC
2,0-43.0 kW: 230 V, 3-phase

To special order

0.3-3.6 kW: 230 V, AC
0.3-6.0 kW: 400 V, 2-phase
1.0-43.0 kW: 400 V, 3-phase or 230 V, 3-phase

Project design/ordering

Descriptive text for - M

VEAB type VFLPG-1200-500-100kW-3x400V-M-A-IP43-NI-40C (see page 7) duct heater with casing of Aluzinc-coated sheet steel, AZ 185, and heater elements of EN 1.4541 stainless steel.
Total output: 100 kW.
Output steps: 25 kW+25 kW+25 kW+25 kW.
Control by external regulator and sensor that must be ordered separately.

Mech-Elec
www.mech-elec.ie
info@mech-elec.ie

Connection example

Max. 6 kW, 400 V, 2-phase

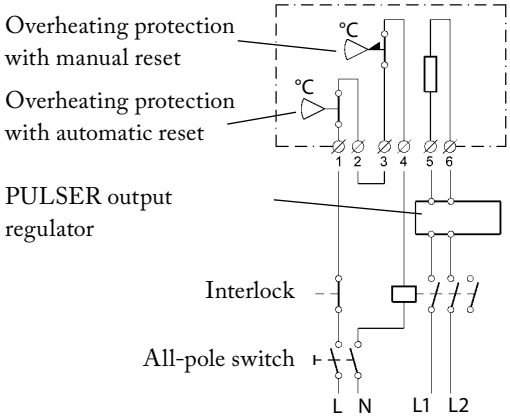

Connection example

Max. 81 kW, 400 V, 3-phase

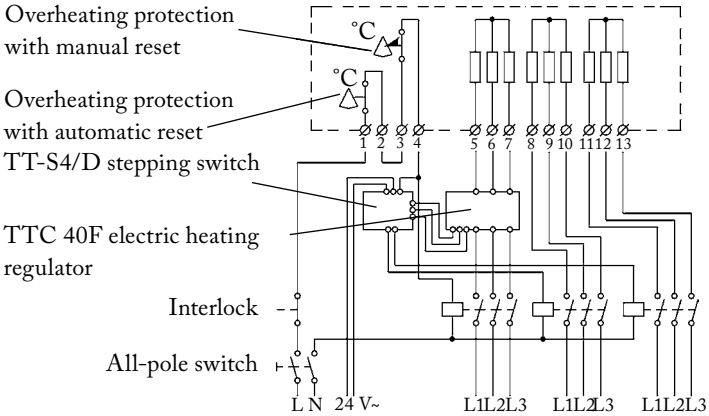

Selecting the regulator

Total output	Output groups	Regulators
0.5 – 6.0 kW	1 group, 400 V, 2-phase	PULSER
6.1 – 17.0 kW	1 group, 400 V, 3-phase	TTC 25 or TTC 2000
17.1 – 27.0 kW	1 group, 400 V, 3-phase	TTC 40 F
17.1 – 34.0 kW	2 groups (1/2 + 1/2), 400 V, 3-phase	TTC 2000 + TT-S1
28.0 – 54.0 kW	2 groups (1/2 + 1/2), 400 V, 3-phase	TTC 40 F + TT-S4/D
55.0 – 81.0 kW	3 groups (1/3 + 1/3 + 1/3), 400 V, 3-phase	TTC 40 F + TT-S4/D
82.0...108.0 kW	4 groups (1/4 + 1/4 +1/4 + 1/4), 400 V, 3-phase	TTC 40 F + TT-S4/D
109.0 – 135.0 kW	5 groups (1/5+1/5+1/5+1/5+1/5), 400 V, 3-phase	TTC 40 F + TT-S4/D
136.0 – 215.0 kW	Output ratio (1 + 1 + 2 + 4, 400 V, 3-phase)	TTC 40 F + TT-S4/D

Mech-Elec
www.mech-elec.ie
info@mech-elec.ie

Electric heater regulators

PULSER

PULSER D

PULSER DSP

TTC 2000

TTC 40F

Stepping switch TT-S4/D

PULSER series

PULSER is a series of electric heater regulators that regulate the output by means of time proportional control (intermittent ON/OFF control). This provides very accurate temperature control.

Degree of protection:	IP30 (PULSER D: IP20)
Max. load:	230 V AC, 3200 W
	400 V, 2-phase, 6400 W

PULSER

The PULSER operates with one sensor, i.e. the built-in room sensor or an external sensor, e.g. a duct sensor.
Automatic switching between 230 V, AC and 400 V, 2-phase.

PULSER D

Same characteristics as the PULSER but for DIN installation.

PULSER M

With extra input for min. or max. limit sensor in the supply air duct*. The PULSER M then controls the room temperature, at the same time maintaining a minimum supply air temperature.
Automatic switching between 230 V, AC and 400 V, 2-phase.

**Use the TG-K330 duct sensor/min. sensor.*

PULSER ADD

The PULSER ADD has no sensor of its own, but is under slave control of another PULSER and operates in parallel with it. This means that two duct heaters can be controlled from one sensor. Automatic switching between 230 V, AC and 400 V, 2-phase.

PULSER 220 X010 and PULSER 380 X010

These regulators are controlled by an external 0...10 V control signal.
Power supply 230 V AC and 400 V, 2-phase respectively.

TTC series

Electric heater regulators that regulate the output by means of time proportional control (intermittent ON/OFF control). which provides very accurate temperature control. Set point adjustment is carried out on the regulator or externally. The TTC series has outlets for external main sensor and min./max. sensor. Use the TG-K360 as min./max. sensor. As an alternative, the TTC series can be controlled by an external 0...10 V signal.

TTC 2000

For wall mounting.

Maximum installed power:	17 kW, 400 V, 3-phase
Automatic switching:	210...415 V, 3-phase
Degree of protection:	IP30

TT-S1 circuit board

Fitted in the TTC 2000 for controlling one basic step of up to 17 kW. At least 50% of the total output must be controlled via the TTC 2000 and a maximum of 50% via the TT-S1. The TTC 2000 and the TT-S1 can jointly control up to 17 kW + 17 kW = 34 kW.

TTC 25, TTC 40F and TTC 63F

For mounting on a DIN rail in an electrical cubicle.

Automatic switching:	210...415 V, 3-phase
Degree of protection:	IP20

Maximum power at the terminals:

TTC 25:	25 A, 400 V, 17 kW
TTC 40F:	40 A, 400 V, 27 kW
TTC 63F:	63 A, 400 V, 43 kW

TT-S4/D stepping switch

Used together with the TTC 25, TTC 40F or TTC 63F for controlling the parts of the total output that exceeds their capacities.
Has four relay outputs that operate in sequence or by binary signals.

Outputs:	4x2 A, 240 V AC normally open
Power supply:	24 V AC

Mech-Elec
www.mech-elec.ie
info@mech-elec.ie

Accessories

	Product	Range	Degree of protection
	Duct sensor TG-K 330	0-30°C	IP20
	Duct sensor TG-K 360 min./max. sensor for the TTC series	0-60°C	IP20
	Room sensor TG-R430 with set point adjustment	0-30°C	IP30
	Room sensor TG-R530	0-30°C	IP30
	Room sensor TG-R630	0-30°C	IP54
	Pressure switch DTV200	20 - 300 Pa Max 5 A, 230 V AC	IP54
	Pressure switch AFS-222	10 - 3000 Pa Max 15 A, 230 V AC	IP20
	Connection kit ANS	For AFS-222	